THE INFORMATION CONTAINED IN THIS DRAWING IS THE SOLE PROPERTY OF PLASTICASE ANY REPRODUCTION IN PART OR WHOLE WITHOUT THE WRITTEN PERMISSION OF PLASTICASE IS PROHIBITED.

REVISIONS			
REV.	DESCRIPTION	DATE	APPROVED

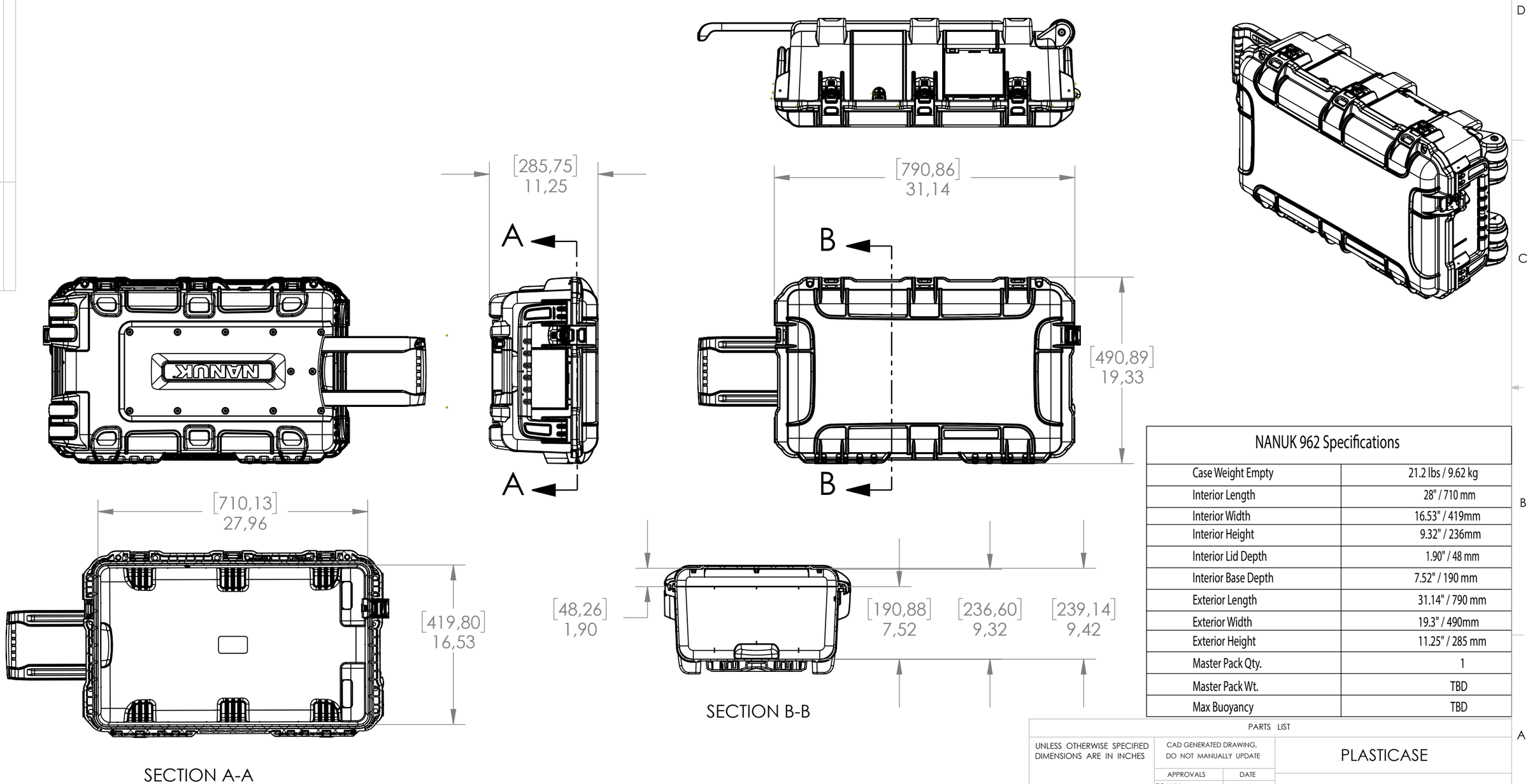

NANUK 962 Specifications	
Case Weight Empty	21.2 lbs / 9.62 kg
Interior Length	28" / 710 mm
Interior Width	16.53" / 419mm
Interior Height	9.32" / 236mm
Interior Lid Depth	1.90" / 48 mm
Interior Base Depth	7.52" / 190 mm
Exterior Length	31.14" / 790 mm
Exterior Width	19.3" / 490mm
Exterior Height	11.25" / 285 mm
Master Pack Qty.	1
Master Pack Wt.	TBD
Max Buoyancy	TBD

PARTS LIST

UNLESS OTHERWISE SPECIFIED DIMENSIONS ARE IN INCHES

MATERIAL

FINISH --

DO NOT SCALE DRAWING

CAD GENERATED DRAWING, DO NOT MANUALLY UPDATE

APPROVALS		DATE
DRAWN	S.C.	2023-01-25
CHECKED		
RESP ENG		
MFG ENG		
QUAL ENG		

PLASTICASE

NANUK 962

SIZE B | DWG. NO. | REV.

SCALE 1:10 | CAD FILE: 975_Assembly_a.01 | SHEET 1 OF 1